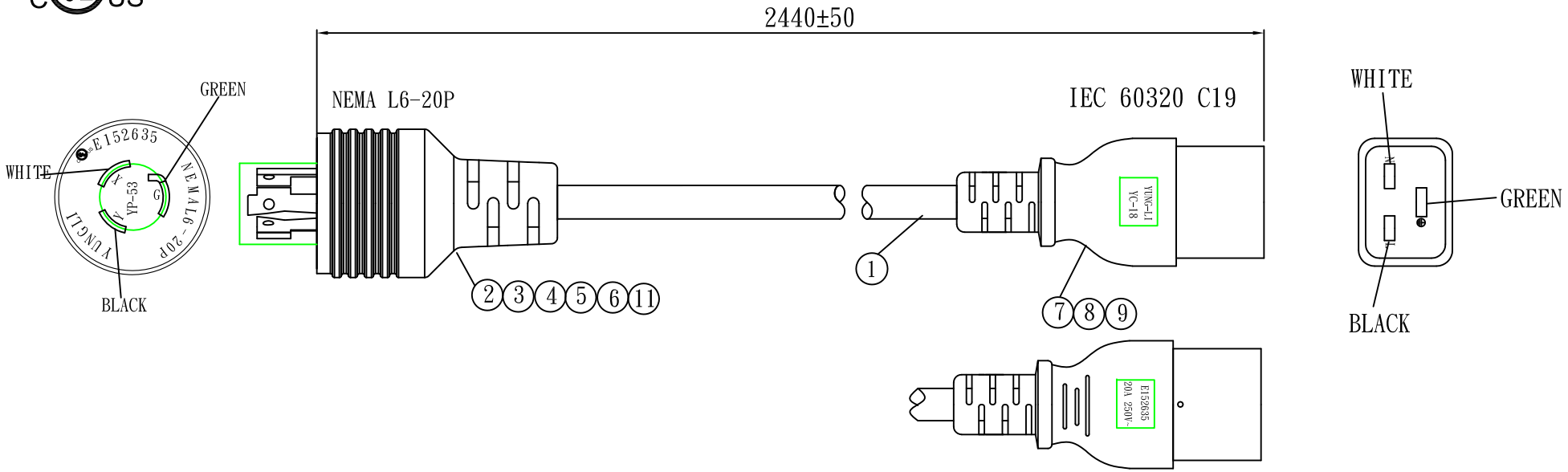

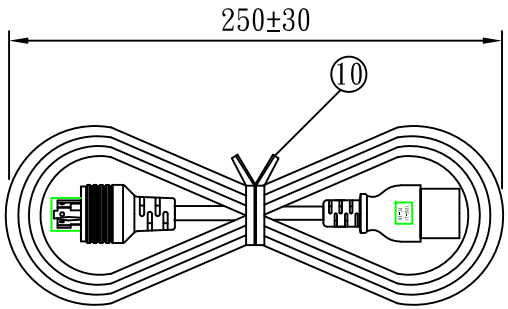

NO.	SPECIFICATION	QTY	REMARK
1	SJT 12/3C 105°C BLACK	1PC	
2	YP-53 PVC PLASTIC:35P BLACK	32g/PC	
3	"N" TER:95654BL-0	1PC	
4	"E" TER:95655BL-0	1PC	
5	"L" TER:95656BL-0	1PC	
6	YP-53 INNER BODY	1PC	
7	YC-18 PVC PLASTIC:50P BLACK	25g/PC	
8	YC-18 INNER BODY	1PC	
9	YC-18 TER	3PCS	
10	MINI TIE:L=180mm BLACK	1PC	
11	SLEEVE	1PC	

Tolerance >0±0.30 >1.0±0.50 >10.0±1.0 >20.0±2.0 Angle: ±1°	Approved		Date		SFCable			
	Checked		Date					
	Drawn	SUKI	Date	19.09.20	Customer			
	Cat.No.	YP-53/YC-18			P/N.	SF-5318-08B		
	Drawing No.	CY-U1822-01	Rev.	B	Material	P.V.C	Unit	mm
					Scale			