Product Name	HDMI Male to Female--360°
Product Numbers	SF-CV310

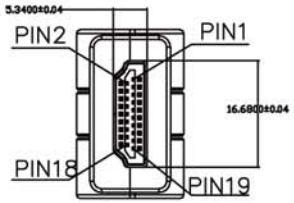

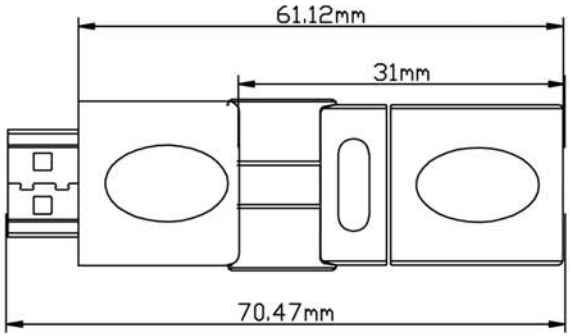

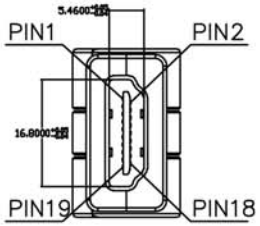

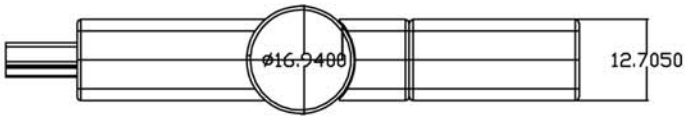

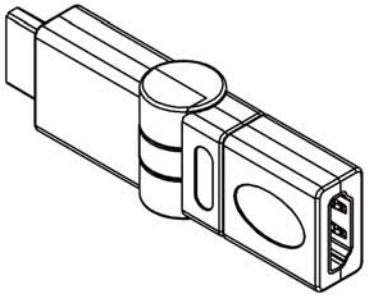

PIN ASSIGNMENT

P1	P2
1	1
2	2
3	3
4	4
5	5
6	6
7	7
8	8
9	9
10	10
11	11
12	12
13	13
14	14
15	15
16	16
17	17
18	18
19	19

ELECTRICAL PROPERTIES:

1. **额定电流** CURRENT RATING：0.5A MAX.
2. **额定电压** VOLTAGE RATING：40V AC MAX.
3. **接触阻抗** CONTACT RESISTANCE: 50M OHMS MAX.
4. **耐电压** Withstand voltage：500V AC MIN.(UNMATED) 300V AC MIN.(MATED)
5. **绝缘电阻** Insulation Resistance：100MΩ MIN.(UNMATED) 10MΩ MIN.(MATED)
6. **耐久性** INSULATION RESISTANCE：50000MOHS MIN.
7. **工作温度** OPERATING TEMPERATURE : -25℃ TO +85℃.

NO.	DESCRIPTION	Q'TY
4	HDMI Female,CONTACT:GOLD	1
3	Electronic line	KG
2	Black ABS plastic	KG
1	HDMI Female,CONTACT:GOLD	1

REV.	DESCRIPTION	DATE

TOLERANCE	INCHES	M/M
.X	.015	.30
.XX	.010	.10
.XXX	.005	.05

DRAWN BY	Dawson	
CHECK BY		
APPD BY		

SFCABLE.COM

TITLE: SF-CV310

HDMI Male to Female--360°

SCALE	NONE	DRAWING NO:	REV. A
UNIT	MM		
DATE	2013.03.08		1/3